Wind Project Case Studies

Vestas V-82 College Installations

Carleton College
St. Olaf College
U of MN - Morris

Vestas V-82 College Installations

Carleton College
St. Olaf College
U of MN - Morris

- Turbine description
  - NEG Micon/Vestas – NM/V 82
  - 1.65 Mw maximum capacity (1650 Kw/hr)
  - 70 meter (230 ft) steel tower – 3 sections – 130 tons
  - 3 Blades – 135 ft – epoxy/carbon-fiber – 7 tons each
  - Hub – 21 tons
  - Nacelle – houses gearbox and generator – 45 tons
  - Blade assembly pitched out 5 degrees to prevent damage (see diag.)

Excerpts from Webinar "Deploying a Wind Turbine on Your Campus", Academic Impressions, February 2008


Three Institutions in Minnesota
Winnipeg
Onta
North Dakota
Universtiy of MN at Morris
South Dakota
St Olaf's College
Carleton College
Milwaukee

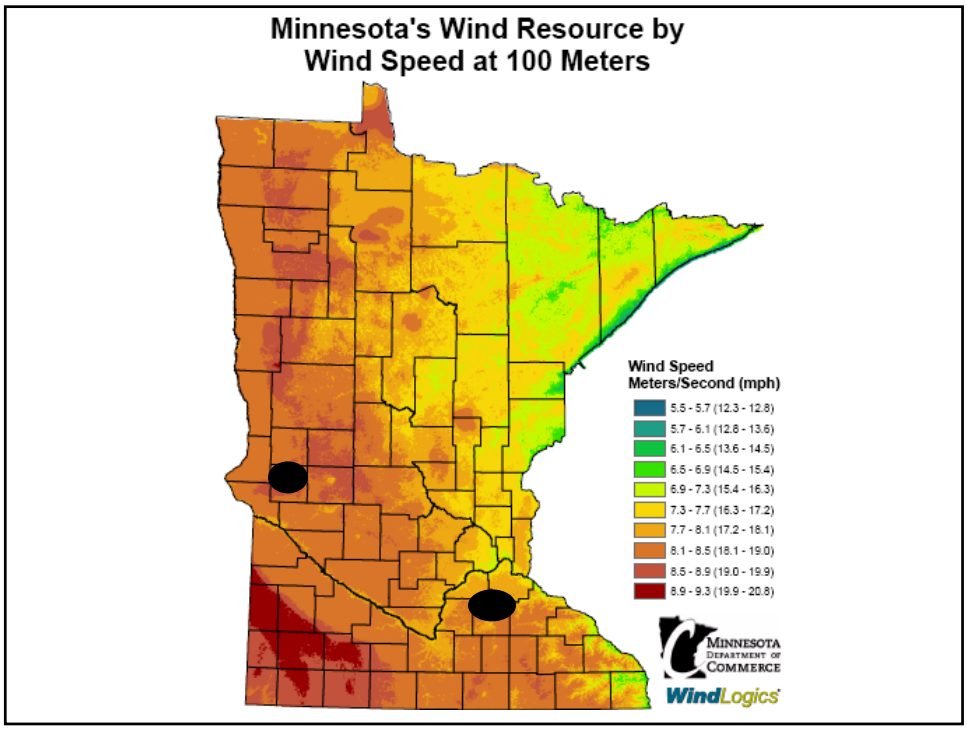
Minnesota's Wind Resource by
Wind Speed at 100 Meters
Wind Speed
Meters/Second (mph)
5.5 - 5.7 (12.3 - 12.8)
5.7 - 6.1 (12.8 - 13.6)
6.1 - 6.5 (13.6 - 14.5)
6.5 - 6.9 (14.5 - 15.4)
6.9 - 7.3 (15.4 - 16.3)
7.3 - 7.7 (16.3 - 17.2)
7.7 - 8.1 (17.2 - 18.1)
8.1 - 8.5 (18.1 - 19.0)
8.5 - 8.9 (19.0 - 19.9)
8.9 - 9.3 (19.9 - 20.8)
Minnesota Department of Commerce
WindLogics

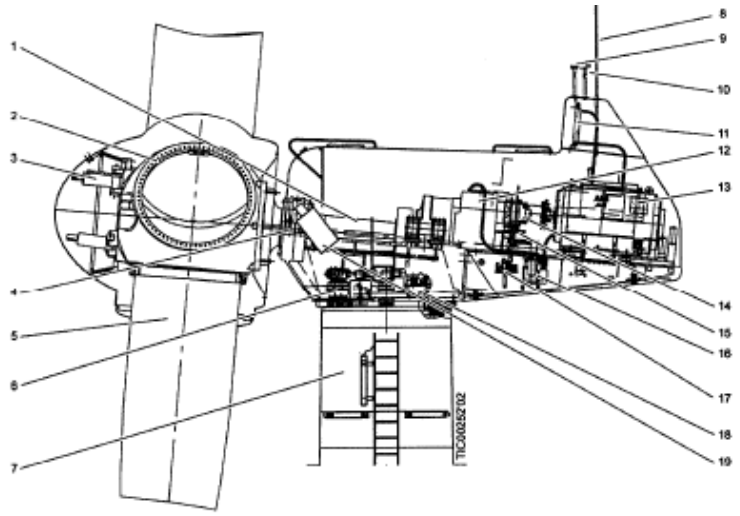

1. Main shaft
2. Hub
3. Active stall system
4. Main bearing
5. Blade
6. Yaw motor
7. Tower
8. Lightning conductor
9. Anemometer
10. Vind vane
11. Radiator
12. Gearbox
13. Generator
14. Disc brake and coupling
15. Collector rings
16. Circulation pump for cooling liquid
17. Hydraulic station for disc brake
18. Hydraulic station for yaw brake
19. Heating unit (arctic only)

Carleton's Installation

- Independent generation – Mini-power plant
- Connected directly to Xcel Energy "grid"
- Sell all power produced
- Financed by endowment and supplemented with a State Grant and production incentives

St. Olaf's Installation

- Self-generation - connected directly to campus "grid"
- Supplemented (when needed) by power from Xcel Energy
- Excess power produced is sold to Xcel energy
- Major funding from grant program
- Other funding from annual capital budget

U of MN at Morris Installation

- Connected directly to campus research center (West Central Research and Outreach Center, aka WCROC)
- Excess power produced is sold to the "grid"
- "Grid" supplies Center power when wind is not blowing
- Funded through grants by MN legislature
- Research opportunities

Initial Homework

- Site info – analyzing the wind resource
- Access to distribution – on/off Campus
- Permit requirements
- Feasibility of hiring a Wind Developer

Wind Resource Analysis

- Available Information – Maps, Data, etc.
- Wind Survey
  - Recommend monitoring at several sites
  - Ability to correlate site data collected with past data collected in vicinity
  - Several monitoring heights required
  - Good data allows reasonable extrapolation to other heights

Permit Requirements

- Permitting
  - Conditional Use Permit (CUP) – County (City)
  - Building Permit – County (City)
  - Driveway Permit – State or County Hwy.
  - FAA Hazard Determination
- Land Lease Agreement (if needed)
- Crop loss negotiation – with farmer

Wind Developer

- Benefits
  - Experience setting up this type of project
  - Agreements/Permitting – legal counsel
  - Local regulatory understanding – knows who to talk to
  - Local grant/incentive program (if any) familiarity
  - Your Time
  - Access to available turbines
  - May have more leverage with suppliers

Approx. 1-3% of total project cost

Defining Project Goals

- Important Questions
  - Why does my institution want to do this?
  - What are the "drivers"?
    - Economic investment
    - "Green" generation
    - Distributed generation
    - Institutional recognition and/or symbolism
  - What will this mean to the institution?
  - How will the results be incorporated across the campus community?
  - Is the project perceived to provide benefits beyond financial and energy considerations?
  - How do you want to do this? i.e. invest in a remote site, build your own, connect to grid, connect to campus infrastructure, etc.

Moving Forward

- Begin four simultaneous project paths
  - Power Company Interconnection Agreement and Power Purchase Agreement
  - State and Federal Incentive Program research and Applications – Investigate financing options
  - Permitting (including FAA)
  - Turbine selection, delivery, and construction

Requirements

- Interconnect Agreement with Power Company
  - Longest duration of negotiation
  - Outlines Terms and Conditions to Connect
- Power Purchase Agreement (PPA)
  - Outlines Payment Rates and Term
  - Rates based on local production costs
    - Current, local coal-fired and nuclear plant production costs used as basis for developing rates
    - For example:
      - Nuclear – approx. 1.8-2.0 cents/kwh
      - Coal – approx. 3-4 cents/kwh

UMM's Installation

U of MN - Morris

- Project Budget

June/July wind assessment	$2,000
Foundation/Transformer/Turbine equipment	$377,900
Evacuation and backfill	$3,200
Trenching electrical line	$4,300
Wind assessment/air ticket	$4,700
Underground work Hwy 329	$6,400
Completion of foundation and transformer	$94,500
Cylinder tests/hold	$100
Decals for wind generator	$1,600
Building permit	$40
Delivery of WTG equipment	$1,275,000
Engineer hours	$2,100
Underground work Hwy 329	$19,100
Consulting fees	$1,500
Travel	$3,200
Stage payment- turbine equipment	$141,700

- Total **$1,174 / kW** $1,937,340

Carleton's Installation

- Project Budget

Turbine*	$1,515,000
Road	$26,000
Site electrical	$18,000
Power line upgrade	$47,000
Phone line (monitoring)	$5,000
Turbine installation and foundation	$215,000
Consult./permits/fees	$39,000

- Total $1,865,000**

*Final price influenced by fluctuating steel prices, the strength of the Euro in world money markets, and availability at time of purchase.

**A similar project priced today would be about $2.5-2.6 million.

$1,130 / kW

St. Olaf's Installation

- As previous slide suggests, $2,600,000
- Prices are ratcheting up quickly in response to demand…for example…
  - Xcel Energy is projected to have 1125 MW of wind in Minnesota by 2011
  - Texas expects to have a doubling of wind MW by 2015
  - Manitoba planning for 1000 MW within the next 10 years

$1,575 / kW

Project Challenges

- Coping with the impact of a delay
  - Turbine delivery
  - Construction/erection equipment delivery or functionality
  - Weather related - wet

Project Challenges

- Construction and equipment challenges
  - Worker safety
  - Site access – equipment delivery, staging and security
  - Accidental damage/replacement parts
  - Onlookers/interested parties/reporters – liability

Project Challenges

- Managing the unpredictable
  - High winds/storms/hail
  - Strike
  - Accidental damage
  - Vandalism
  - Protests

Integration into the Curriculum

- Opportunities as a learning tool.
- Coordinating with Faculty and Dean's Office.
- Using data from turbine to conduct research.
- Wind turbine as research tool (wind to H2).
- Learning about renewable energy possibilities with real data.
- Hosting student groups.

Marketing and Promotion

- What is your message?
- Who to Inform
  - AASHE
  - Local environmental groups
  - Alumni
  - Prospective Students
- How to get the message out
  - Campus webpage
  - Press release
  - Conference presentations
  - Student presentations
  - Invited tours
- How to talk about it

Summary

- When deploying a wind turbine
  - Make sure you understand why you want to do a project…What the desired outcomes are.
  - Determine appropriate project size and to what type of destination the power will be delivered.
  - Make sure you have monitored and determined a viable, desired wind site.
  - Make sure your site allows for access to the desired electrical delivery systems (end user).
  - Work WITH your facilities group from the beginning, as they have a direct impact on the success of the project.
  - Communicate advantages and enlist campus support (faculty, staff and student).

Summary

- When deploying a wind turbine
  - Make sure you understand why you want to do a project…What the desired outcomes are.
  - Determine appropriate project size and to what type of destination the power will be delivered.
  - Make sure you have monitored and determined a viable, desired wind site.
  - Make sure your site allows for access to the desired electrical delivery systems (end user).
  - Work WITH your facilities group from the beginning, as they have a direct impact on the success of the project.
  - Communicate advantages and enlist campus support (faculty, staff and student).

Summary – cont.

- When deploying a wind turbine
  - Consider holding informal public meetings to solicit input and support of the broader community
  - Determine whether or not to enlist a wind developer.
  - Prepare initial production estimates to verify income/offset costs on an annual basis.
  - Compare income/offsets to estimated annual expenditures, (i.e. debt service, maintenance, insurance, lease costs (if any), etc.)
  - Confirm value of "soft" income, (i.e. educational benefits, sustainability initiatives, institutional recognition, recruiting, etc.) as there may be reasons beyond economic viability to do this.

Summary – cont.

- When deploying a wind turbine
  - Begin the four simultaneous planning efforts.
    - Interconnection Agreement and PPA
    - Investigation of available grants/incentives/CREBs
    - Investigate and procure applicable permits
      - In particular, don't forget the FAA Hazard Determination!
    - Turbine selection and procurement process

Summary – cont.

- When deploying a wind turbine
  - Select vendor and negotiate agreement.
    - Performance
    - Price
    - Delivery schedule
    - Maintenance support
    - Warranty **(Remember the extended warranty!)**
  - Determine the delivery and construction schedule.
  - Complete the installation.
  - Share your success!

John Deere Harvest Wind Farm Project

- Deere is currently operating (75 MW), constructing (238 MW) and are approved for construction (303 MW) of wind facilities in 7 states
- Deere and Wolverine are rural based
- Deere and Wolverine have a strong community focus
- Deere's core values of quality, integrity, innovation and commitment resonated with Wolverine
- Most viable Michigan renewable project of all projects evaluated

Excerpt from 2008 MiAPPA Conference at CMU by John Miceli, Mar 08

Oliver and Chandler Townships
Huron County, Michigan
Nameplate Capacity 52.8 MW
32 Vestas V82 Turbines

Project Information

Developer	**John Deere Wind Energy**
Facility Name	**Harvest WindFarm L.L.C.**
Location	**Between Elkton and Pigeon in Huron County, MI**
Size	**Over 3,200 acres**
Equipment	**Thirty-two 1.65 MW Vestas V-82 Turbines (52.8 MW Total)**
Turbine Specifics	**80 meter hub height (262 feet) 40 meter blade length (131 feet) 120 meter overall height (393 feet) 283 tons total weight**
Operational Data (operational in March 2008)	**Cut-in wind speed – 7.9 mph Cut-out wind speed (10 minutes) – 44.7 mph Cut-out wind speed (1 minute) – 53.7 mph Cut-out wind speed (1 second) – 71.6 mph**

$2,333 / kW


Crane Assembly


The Crane


Tower Assembly

Setting the Base Section


Setting the Nacelle


Setting the
Blades & Hub


Finished Products


Rural Integration

How Many Turbines to Power Michigan?

	130,000,000,000	kWhr per Year Consumed in Michigan
=	130	million MW-hrs per Year
	8,760	Hours per Year
	32%	Estimated Capacity Factor
=	46,376	MW Capacity Required of Wind
	1.65	MW Vestas V82 Turbine
=	28,106	Vestas V82 Turbines
	15%	Renewable Portfolio Standard
=	4,216	Wind Turbines
=	132	Harvest Wind Farms

About $16B, Investment

Questions

Vestas V-82 (1.65MW)
Wind Turbines